Investigation of Electron Vortices in Electrostatic Plasma Lens[1]

Yu. Chekh, A. Goncharov, I. Protsenko, and A. Evsyukov

Institute of Physics National Academy of Sciences of Ukraine, 46, pr. Nauky, Kyiv, 03028, Ukraine
Phone: +38 044 525 78 24, Fax: +38 044 525 23 29 E-mail: chekh@iop.kiev.ua

Abstract – We present the first experimental results on the observation of electron vortices in an electrostatic plasma lens at the high radial gradient of electron density. Anharmonic low frequency ($\omega_{ci} << \omega \sim \omega_{pi} << \omega_{pe}, \omega_{ce}$) large-amplitude ($\varphi_{osc} >> k_{Bol}T_e/e$, $k_{Bol}T_i/e$) potential waves propagating in azimuth direction are observed. The results of the measurement of electric field distributions enable to establish that electron bunches (arising due to instability) contain trapped electrons rotating around the corresponding bunch center with high velocity, in such a way making up the vortex. The main mechanism resulting in the stabilization of vortex amplitude is established.

1. Introduction

In the theory of plasma physics, plasma is often assumed to be quasineutral. The deviation from this rule is possible for beam plasmas [1], diode plasma systems [1, 2], various plasma-optical devices [3, 4], plasmas with high-frequency electromagnetic oscillations, and obviously in one-component plasmas [5]. Recent researches of tokamak plasma also reveal the fact that the assumption of quasineutrality does not allow to analyze all the variety of tokamak operation regimes correctly [6, 7]. We investigated the possibility for nonneutral vortices to be formed in the two-component low-temperature low-density collisionless ion beam plasma consisting of positive unmagnetized ions of medium-energy beam and magnetized electrons. Such a medium can be formed in the electrostatic plasma lens (**PL**) [3, 8]. This lens is the axially symmetric plasma-optical device intended for positive ion beam manipulation. In fact, it is an electron trap, where electrons are retained in longitudinal and radial directions by the electrostatic and magnetostatic fields, respectively. Electrons are generated by the peripheral ions through the ion-electron emission from electrodes of the lens, some part of these electrons remains in the lens providing equipotentialization of magnetic field lines [3, 4]. In the used experimental conditions magnetic field is strong enough to magnetize electrons, but practically has no effect on ions. Similarly, the voltage applied to the lens electrodes is sufficiently high to realize overthermal space-charge electric field but it is still small for ion trajectories to be effectively bended. The electric field of the negative space charge in the lens and externally applied magnetic field results in the azimuthal drift of electrons with the velocity

$$\boldsymbol{V} = [\boldsymbol{E} \times \boldsymbol{B}]/B^2, \qquad (1)$$

where $\boldsymbol{E}$ is the electric field intensity, $\boldsymbol{B}$ is the magnetic field induction. It is known that the radial gradient of the drift velocity (or shear) causes the excitation of strong instability [9-11]. This gradient may arise due to the presence of radial magnetic field gradient or nonuniform distribution of electron density. The excitation of instability results in the bunching of electrons and their self-consistent electric fields cause additional vorticity of electron trajectories. As it was shown theoretically [10, 11], these bunches, having approached some density, can create the chain of electron vortices with closed trajectories of electrons. In this paper we present the experimental results of investigations of nonlinear stage of instability at the large radial gradient of electron density.

2. Experimental setup and approach

The experimental setup is shown in Fig. 1.

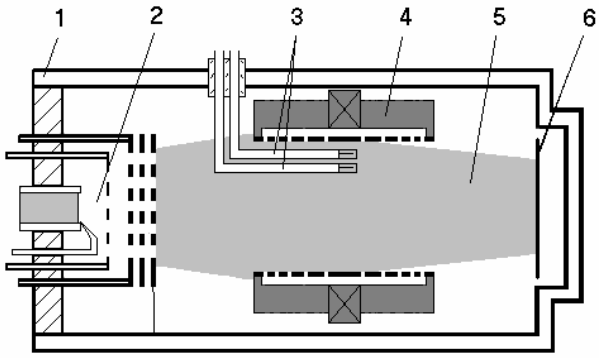

Fig. 1. Scheme of experimental setup; 1 – vacuum chamber; 2 – ion source; 3 – capacitive or Langmuir probes; 4 – plasma lens; 5 – ion beam; 6 – collector.

A vacuum arc ion source [12] with a grid anode and three-electrode, multi-aperture, accel-decel ion extraction system was used. The extractor contains 84 individual beamlet holes of diameter 4 mm, spanning an overall diameter of 55 mm. Ion beamlets extracted

[1] This work was supported in part by the Ukrainian Academy of Sciences, Contract No. 0105U005319

from emission holes widen during propagation in the space between source and lens to form practically uniform ion beam current density at the lens inlet aperture.

The source operates in a repetitively-pulsed mode and produces moderate-energy, broad, heavy metal ion beam with principal parameters for the work described here: beam pulse duration – 100 μs, pulse repetition rate 0.5 pps, beam extraction voltage – 12 kV, beam current I_b = 400 mA, Cu ion species.

The electrostatic plasma lens (Fig. 2) had an input aperture diameter of 7.4 cm and a length of 16 cm. The maximum positive DC potential φ_L = 1 kV was applied to the central lens electrode and several symmetrically arranged adjacent pair electrodes, the other electrodes being grounded. Most experiments were performed at high voltage applied to the central electrode and one pair of adjacent electrodes (conditionally denoted as SPD configuration). The magnetic field with the induction of 40 mT at the PL center was created by permanent magnets. The vacuum chamber pressure was $\leq 1.5 \times 10^{-5}$ Torr, allowing plasma formation within the lens volume by the beam itself via ion-electron emission from the lens electrodes.

The azimuthal and radial distributions of electrostatic potential were studied using a system of capacitive probes. The azimuthal profile of the wave potential was derived from the voltage time series measured by the probes. The azimuthal wave velocity was calculated from a time shift of the phase of oscillations detected by two probes spaced by a definite azimuthal angle. The radial electric wave field was measured by a pair of double capacitive probes spaced by 5 mm, each probe sensor having a diameter of 1 mm and length of 5 mm.

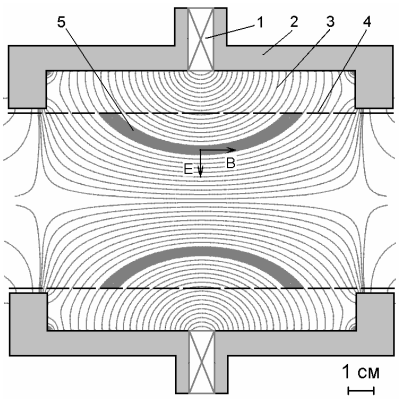

Fig. 2. Plasma lens; 1 – permanent magnets; 2 – magnetic conductor; 3 – magnetic field lines; 4 – electrodes; 5 – approximate localization of electron layer.

The measuring circuits had equal (within the limits of ~ 10 %) transmission coefficients in a frequency band from 100 kHz to 15 MHz. The distributions of potential could not be adequately determined on a time scale of the beam pulse duration due to some factors of the circuits, therefore the constant (within ≈ 20 μs) potential component in the PL was determined using a single Langmuir probe that could be moved in the radial direction. The constant potential component was measured in the time interval between electron bunches. In these intervals the plasma medium is least perturbed by the fields of electron bunches. For this reason, we denote the potential distribution and corresponding electric field distribution measured by the Langmuir probe as "background". All probes were introduced nearly parallel to the system axis, their sensitive tips being placed in the central cross section of the PL. The signals were measured using an S8-14 oscillograph with a working bandwidth of 50 MHz.

3. Experimental results

We used high voltage applied to the neighboring electrodes for annular electron density distribution to be created. Electrons emitted from the lens electrodes have to equipotentilize magnetic field lines, following to step-like potential distribution over the electrode system applied externally. In turn, the step-like radial potential distribution corresponds to the mentioned above annular electron density distribution. This method enables to localize the region of instability excitation, as well as to manipulate its spatial position.

As it was anticipated, the maximum amplitude of the waves was observed in the rage of localization of the potential step (Fig. 3). The observed large-amplitude anharmonic waves (Fig. 4) were found to propagate in the $\boldsymbol{E} \times \boldsymbol{B}$ drift direction with the constant angular velocity ($\boldsymbol{E}$ is the background electric field).

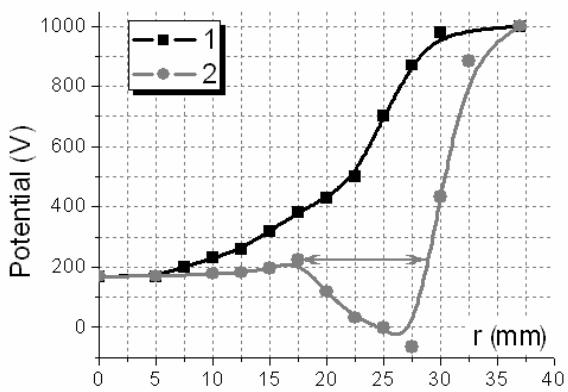

Fig. 3. Radial potential distributions in the PL central cross section 1 – background potential; 2 – lowest potential achieved during the oscillation period; the radial dimension of the vortex is denoted by arrow; SPD configuration, φ_L = 1 kV, m_θ = 5.

For the conditions observed, electron and ion Langmuir frequencies are $\omega_{pe} \approx 2 \cdot 10^9$ s^{-1}, $\omega_{pi} \approx 1 \cdot 10^7$ s^{-1} and gyrofrequencies equal to $\omega_{ce} \approx 1 \cdot 10^{10}$ s^{-1}, $\omega_{ci} \approx 1 \cdot 10^5$ s^{-1}, respectively, while the observed cyclic frequencies of oscillations $\omega \approx (0.6 \div 1.4) \cdot 10^7$ s^{-1} there-

fore the conditions $\omega_{ci} << \omega \sim \omega_{pi} << \omega_{pe}, \omega_{ce}$ is satisfied. The frequency of rotation $\nu = \omega/(2\cdot\pi\cdot m_\theta)$ of the constant-phase regions around the PL axis, as well as the number of wavelengths (m_θ) within the 360° azimuthal angle interval, depend on the distance of a potential step (created by electrodes) from the axis and on the magnitude of this potential step. For the same electrode potential φ_L = 1 kV, the frequency ν was found to change within 200–500 kHz, while m_θ being within 4–6, depending on the potential distribution over electrode system. The temperature of electrons emitted from lens electrodes is near $T_e \approx 10$ eV while the effective temperature of ions $T_i \approx 100$ eV, therefore the amplitude of potential oscillations $\varphi_{osc} >> k_{Bol}T_e/e$, $k_{Bol}T_i/e$, where k_{Bol} - Boltzmann constant, e – electron charge.

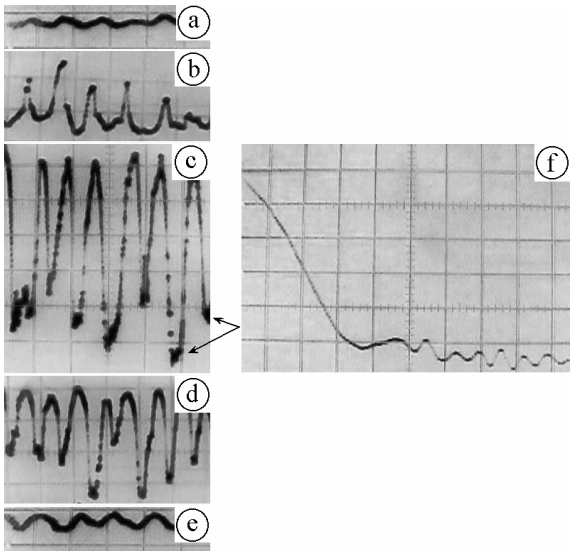

Fig. 4. Oscillograms of potential oscillations in the PL central cross section measured using capacitive probes at r = 5 (a), 20 (b), 27.5 (c, f), 30 (d), and 32.5 mm (e). Sweep: 140 V/div (vertical); 0.5 μs/div (horizontal), except for (f) – 0.02 μs/div. Conditions are the same as for the Fig. 3.

Further we consider the way to define whether the electron bunches are the vortices or not. We imply that "**vortex**" is localized structure with closed trajectories, i.e. the vortex has to have separatrix. In the investigated conditions electrons are strongly magnetized (i.e. the typical Larmor radius is much less than the characteristic dimensions of considered structures), and we can omit the inertial terms in the equation of motion for electrons. As the electron plasma in the PL is low-temperature and collisionless, we can use simple drift equation of motion, which has the solution (1). Therefore electron vortices can be formed due to the balance of electrostatic and Larmor forces. Equation (1) defines the one of the main principles of plasmaoptics: the magnetic field lines have to be equipotential, also from this equation it follows that equipotentials of electric field correspond to electron trajectories [3]. Thus we can clearly recognize formation of vortices by the presence of local extrema of the potential distribution in the plane, which is normal to magnetic field, in the strict sense it have to be elliptic point on the surface corresponding to the distribution of electric potential in the central plane of the lens. Local minima correspond to vortex-bunches with the local excess of electrons, and maxima correspond to vortex-holes with the luck of ones. Fig. 3 indicates the presence of electron vortex-bunches displaced in the radial direction approximately between 17 and 28 mm, that is the radial size of the separate vortex is near 1 cm, the azimuthal size is just a little bit longer. The small maximum near r = 17 mm on the distribution 2 in Fig. 3 is just saddle point which does not represent the vortex. The mode number m_θ = 5 corresponding to the conditions of Fig. 3 represents the number of vortices in the "chain" displaced along the azimuthal direction. It is possible to show that bunches are the vortices through the comparison of background electric fields with those of waves, but it is more complicated way. We just note that the radial electric field of waves is significantly (up to three times) exceeds the background field in the regions where these fields are directed oppositely (see Fig. 5).

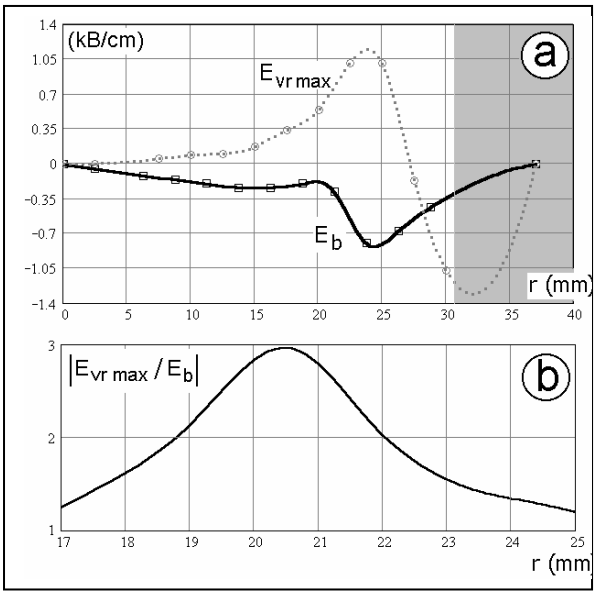

Fig. 5. Parameters of radial electric fields in the PL center; a) distributions of background electric field E_b and maximum electric field of the waves $E_{vr\ max}$; b) absolute value of $E_{vr\ max}/ E_b$ ratio in the range r = 17-25 mm. Darkened area corresponds to the region, where electrons are unmagnetized. Conditions are the same as for the Fig. 3.

In addition, we performed numerical simulations of electron trajectories in the central cross section of

the PL using the experimentally measured field distributions. The results of these calculations indicate that the conditions of trapping are well satisfied and the chain of vortices-bunches is actually formed in the PL. In these vortices, electrons rotate with a high velocity that is much greater than that of electron bunch moving as a whole around the PL axis. The calculated rotation frequency of electrons in the vortices was found to be in satisfactory agreement with the observed small-scale oscillations in the regions of minimum potentials of the waves (see regions indicated by arrows in Fig. 4c; Fig. 4f shows one of such regions on a greater time scale). It should be noted that the frequency of electron rotation around the system axis in the background distribution is $\approx$ 10 MHz. Therefore, the velocity of the azimuthal motion of the observed structures is significantly lower than both the background electron drift velocity and electron rotation velocity in bunches. Such vortices can be classified as "slow" [11].

Thus, we can ascertain that the observed anharmonic electrostatic waves of large amplitude are the manifestations of the large-scale, "slow" nonneutral electron vortices in two-component ion beam plasma, which are generated during the development of beam-drift instability in the presence of nonuniform electron density distribution. This statement is confirmed by the whole body of data, including the following: (i) the existence of regions of the potential extrema, where the potential wave field is significantly greater than the background field; (ii) the formation of localized vortex-bunches revealed by the simulations of electron trajectories using the experimentally measured field distributions; (iii) satisfactory quantitative agreement of the frequency of small-scale oscillations with the calculated frequency of vortex rotation; and (iv) the fact that the electron rotation velocity in a bunch is much greater than the velocity of the electron bunch moving as a whole. It should be noted that the potential at the vortex center is close to the potential of an electrode from which the field lines, passing through these regions, originate (see Fig. 3), in the given case, this electrode is grounded. This implies that, under the studied experimental conditions, electrons trapped in the vortex decrease the potential in this region down to the ground level and acquire the ability to go to the electrodes along magnetic field lines. As a result, the space charge accumulation ceases and the vortex amplitude is stabilized. The vortex amplitude can also be stabilized at the expense of electron loss in the direction across the magnetic field, provided that the sum of the inertia and Coulomb forces exceeds the Lorentz force (this case corresponds to the high electron density or low magnetic field). In this case, the vortex has to widen and in the limit of weak magnetic field extends over the entire PL volume [11]. However, with the use of the appropriate estimates it can be shown that under the experimental conditions studied the number of electrons accumulated in vortices is insufficient for this to be the case, and the amplitude is stabilized by the first mechanism.

It should be noted that the considered conditions are far beyond the optimal ones of PL operation at low magnetic fields, where electron Larmor radius is comparable with the lens radius and the instability could not be excited.

Acknowledgment

The authors are grateful to I.A. Soloshenko and V.I. Maslov for fruitful discussions and useful remarks.

References

[1] R.C. Davidson, *Physics of Nonneutral Plasmas*. Imperial College Press, 2001.
[2] R.V. Lovelace, E.Ott, *Phys. Fluids*, vol 17, p. 1263, 1974.
[3] A.I. Morozov A., S.V. Lebedev, "*Plasmaoptics"* in *Reviews of Plasma Physics*, edited by Leontovich M., (New York: Consultants Bureau, 1975).
[4] B.H. Wolf, *Handbook of Ion Sources.* CPC Press, 1995.
[5] T.M. O'Neil, *Physics Today*, pp. 24-30, February 1999.
[6] A.V. Gordeev, *Plasma Physics Reports*, vol. 27, N 9, pp. 769-772, 2001.
[7] Yu.V Gott, E.I. Yurchenko, *Plasma Physics Reports*, vol. 22, N 1, pp. 13-20, 1996.
[8] Yu. Chekh, A. Dobrovolsky, A. Goncharov, I. Protsenko, and I. Brown, *Nuclear Instruments and Methods in Physics Research Section B*, vol. 243, N 1, pp. 227-231, 2006.
[9] A. Goncharov, S. Gubarev, A. Dobrovolsky, I. Litovko, I. Protsenko, *Problems of Atomic Science and Technology, Ser.: Plasma electronics and new acceleration methods (2),* N 1. pp. 229-233, 2000.
[10] A. Goncharov, I. Litovko, *EEE Trans. Plasma Sci,* vol. 27, N 4, pp. 1073-1078, 1999.
[11] A. Goncharov, V. Maslov, and I. Onishchenko, *Plasma Physics Reports*, vol. 30, N 8, pp. 662 – 670, 2004.
[12] I. Brown, *IEEE Trans. Plasma Sci*, vol. 21, N 5, pp. 537-546, 1993.