Measurement of Ion Erosion Rate of Cathode Material in a Vacuum Arc Discharge[1]

K.P. Savkin

Institute of High Current Electronics Russian Academy of Science,
2/3 Academichesky ave., Tomsk, 634055, Russia, Phone: +7(3822)491776, Fax: +7(3822)492410,
savkin@opee.hcei.tsc.ru

Abstract – The ion erosion rate of cathode material in a vacuum arc was determined by the method of total ion current measurement. The discharge system allowed ion collection from the arc plasma streaming through a hemispherical mesh anode with geometric transparency of 72%. A range of different cathode materials was investigated, and the arc current was varied over the range 50-500 A. We find that the ion erosion rate depends only on the cathode material, with values in the range from 16 to 173 μg/C and generally greater for elements of low cohesive energy. The application of a strong axial magnetic field in the vacuum arc cathode region leads to increase normalized ion current, only by virtue of enhanced ion charge states formed in a strong magnetic field, but the ion erosion rate value remains a constant.

1. Introduction

Although the basic processes of plasma formation in a vacuum arc discharge have been investigated intensely in recent decades [1]. But the extreme values of cathode spot parameters [4-8] lead to difficulties in researching of the processes transition of cathode material from solid state to density plasma inside the cathode spots. At the same time very important parameter the ion erosion rate can be determined by simple measurements of total ion current, arc discharge current and ion charge state distribution.

Investigation of ion erosion rates has been reported by Plyutto and co-workers [9], Kimblin [10,11], Udris [12], Daalder [13, 14], Mesyats and Barengol'ts [15], and Brown and Shiraishi [16]. In these investigations it was found that the ratio of ion current to arc current is typically $\alpha_i = 0{,}1$.

Earliest work in determining ion erosion rate was done by Kimblin [10], [11]. He used two methods: first is based on measuring ion current to shield-collector, and the second is based on weighing the cathode before and after arc influence. But between the results of these methods is discrepancy due to the contribution of macroparticles to cathode erosion. Experimental results by Daalder [13] show that the mass of cathode material removed by the macroparticles flux is about the same or greater than the mass of cathode material leaving in form of ion. From analysis of the cathode erosion rate as a function of charge transferred by the vacuum arc, Daalder concluded that the total erosion rate approaches the ion erosion rate if the charge transferred by the arc keeps small. Based on the assumption that the ratio ion to arc current equals 0,1, Daalder calculated the ion erosion rate for fourteen cathode materials using values of mean ion charge states published in [14].

Present work is concentrate on the ion erosion rate for cathode material in a vacuum arc discharge determination by full ion current measurements from plasma discharge regardless from the cathode to the anode mass transfer via macroparticles emission. In addition to ion current measurements under ordinary conditions of the vacuum arc operation the normalized ion current measurements at strong axial magnetic field in the cathode and arc region have been performed.

2. Experimental details and results

For the work described here we have produced the diagnostic vacuum arc discharge system with in order to have it optimized for the measurements. The ion current was measured utilizing the full plasma flow. The discharge system used a cathode unit «Mevva» ion source type [17], and a custom mesh anode of hemispherical shape providing high plasma transmission independent of the ion flow direction. In the measurements, much attention was given to geometric effects so as to determine the necessary correction factors as accurately as possible, thereby accounting for ions collected by the anode and not recorded by the designated, biased ion collector. A schematic of the experimental setup is shown in Fig. 1. The cathode surface 2 was positioned exactly in the center of a hemispherical stainless-steel mesh

[1] The work was supported by the U.S. Department of Energy, Initiatives of Proliferation Prevention, project IPP-LBNL-T2-196, under Contract No. DEAC02- 05CH11231, and by the Russian Foundation for Basic Research, grant RFBR # 05-02-16256a.

anode 1 of radius 109 mm. The mesh grid size was 2 mm x 2 mm, and the geometric transmittance was 72 %. With this geometry, ions can "see" the same mesh regardless of their flow direction.

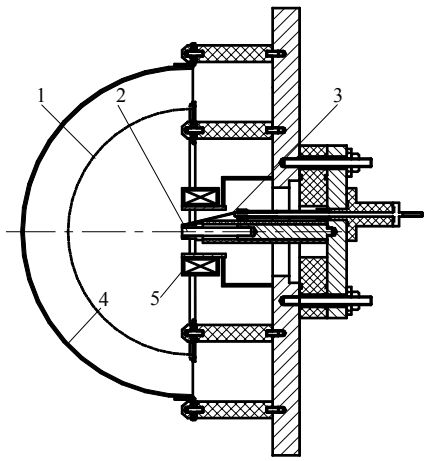

Fig.1 Experimental setup. 1 –mesh anode, 2 –cathode, 3 –triggering electrode, 4 –collector, 5 –magnetic coil.

The anode was surrounded by a hemispherical stainless-steel collector 4 that was negatively biased up to –100 V with respect to the grounding anode. Ion saturation was clearly reached when the bias approached –75 V. During an arc pulse, the bias of –100 V dropped less than 5 V at maximum ion current. A seven-stage pulse-forming network provided arc pulses of several hundred microseconds duration, adjustable amplitude of several hundred amperes, with a repetition rate up to 10 pulses per second. A pulsed axial magnetic field in the region of the cathode surface could be formed, when it is necessary, by the magnetic field coil 5. The vacuum base pressure of the experimental system was about 10^{-4} Pa.

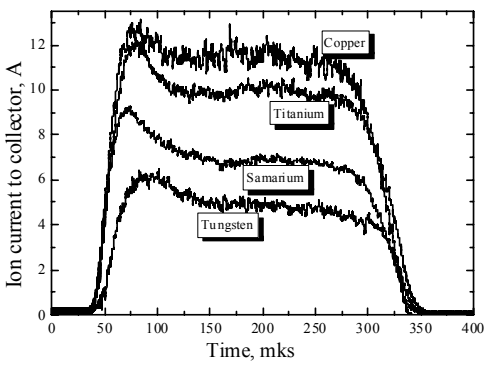

Fig.2 Examples of original data for 100 A arc current, copper, titanium, samarium and tungsten ion currents.

Measurements included monitoring the arc current and the ion current to the collector electrode using a digital storage oscilloscope (Tektronix TDS 224). Typical experimental oscillograms of ion current collected at arc current amplitude 100 A are shown in Fig. 2. The results of our measurements are shown in Fig. 3, where the dependence of the (geometry-corrected) ion current is plotted as a function of vacuum arc discharge current. The relationship is linear as expected. These results indicate that the normalized extracted ion current $\alpha_i = I_{ion}/I_{arc}$, does not depend on the vacuum arc current over the current range investigated is consistent with the findings that increasing the arc current leads to an increase in the *number of emission centers* (spot fragments) rather than changing the character of these centers.

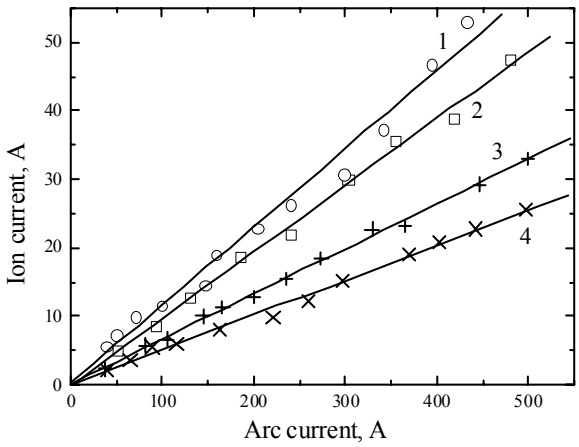

Fig.3 Ion current, corrected for the factor of anode mesh transmittance, as a function of arc current for some cathode materials (1 –copper, 2 –titanium, 3 –samarium, 4 –tungsten).

3. Discussion

As follows from analysis of experimental characteristics (Fig. 3) it can be seen that although the normalized ion current α_i is independent of arc current, it is far from independent of cathode material, as often assumed. The values of α_i range from 5 % (W) to 19 % (C). One might use an average α_i -value of 8 %, keeping in mind that the actual value may be different by more than 50 %.

The ion erosion rates estimated by expression (1), where α_i is normalized ion current, M_i is atomic mass of cathode material, $\overline{Q}_i$ is mean ion charge state, e is elementary charge.

$$\gamma_i = \alpha_i \cdot \frac{M_i}{e\overline{Q}_i} \qquad (1)$$

The values of normalized ion current and ion erosion rate obtained as a result of this work are presented in the Table 1 together with results of earlier researches. The values of ion erosion rates by our measurements are distinguished from Mesyats's [7] and Daalder's [14] data. Possible reasons for these differences may be contained in the details and methodology of data interpretation. Although much attention was

concentrate to use accurate correction factors, a small systematic error in our measurement could be due to overestimating the actual transmittance of the anode mesh. However it is more likely that the contributions of macroparticles were not accurately accounted for in experiments that utilized mass determination methods [7, 14].

Table 1. Normalized ion current α_i and ion erosion rate γ_i in comparison with published data

Cathode material	This experiment		Cohesive energy [18]	Ref. [7]	Ref. [14]
	α_i, %	γ_i, 10^{-9} kg/C	eV/atom	γ_i, 10^{9} kg/C	γ_i, 10^{-9} kg/C
C	19	23,8	7,37	16–17	–
Mg	12,7	18,8	1,51	25	15
Al	11,2	15,9	3,39	25	15
Ti	9,7	22,4	4,85	–	–
Co	9,6	30,4	4,39	–	–
Cu	11,4	33,4	3,49	35–40	–
Y	5,5	21	4,37	–	–
Mo	3,8	11,6	6,82	47	–
Cd	12	94,6	1,16	130	79,1
Sm	6,5	46,1	2,14	–	–
Ta	5,3	31,2	8,1	–	59
W	5	27,1	8,99	62	57
Pt	5,6	50,6	5,84	–	–
Pb	14,3	172,8	2,03	–	120,8
Bi	10,2	171,5	2,18	–	168

The value of normalized ion current has been correlated with the value of cohesive energy (see Table. 1). The cohesive energy is defined as the energy needed to separate an atom from the solid to infinity [18]. Thus it is shown that, in general, the normalized ion current with cohesive energy are roughly in opposing phase, as one would expect from the "cohesive energy rule" for vacuum arc discharges [18]. The physical interpretation is clear: materials of greater cohesive energy require more energy for the phase transformation from solid cathode material to metal plasma, and thus an equal amount of energy produces more (or less) plasma for materials of lower (or higher, respectively) cohesive energy.

It is widely known [2] that the application of a strong axial magnetic field in the vicinity of the cathode leads to an increase in the metal ion charge states in the plasma, but a mechanism of the strong magnetic field influence on the ion erosion rate was not proposed. The influence of magnetic field on the normalized ion current is shown on Fig. 5. Bearing in mind our hemispherical experimental setup, focusing (or magnetic collimation) of plasma flow by the magnetic field cannot be completely responsible for the observed ion current growth, but can only redistribute the current density on the collector. A comparison of the normalized ion current increase with magnetic field (Fig. 5) and the ion charge state increase with magnetic field shows quite similar magnetic field dependences. For example, the increase factors of normalized ion current for carbon, aluminum, copper and platinum are 2.05, 1.4, 1.65, and 1.65, and the increase factors of the mean ion charge state number for these cathode materials are 1.9, 1.4, 1.5, and 1.7, respectively. The difference in these factors for given cathode material is less than 15%. This suggests that the effect of the magnetic field is not to just change the plasma flux distribution but rather to increase the measured (electrical) ion current via increasing the ion charge states. As follows from expression (1), the ion erosion rate it is directly proportional to an ion current and inversely proportional mean ion charge state. Thus at the equals increase factors of normalized ion current and ion mean charge state the value of ion erosion rate for investigated materials keeps constant.

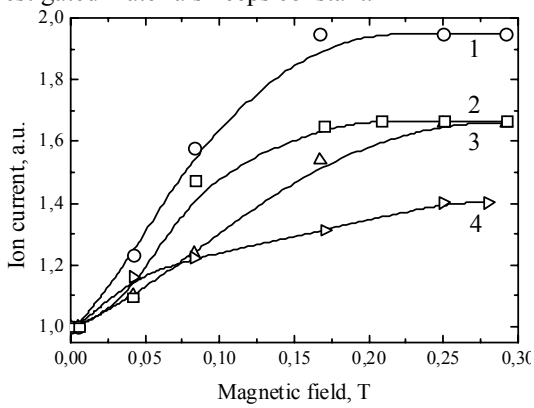

Fig. 5 Normalized ion current as a function of magnetic-flux density for different cathode material (1 –carbon, 2 –copper, 3 –platinum, 4 -aluminium).

3. Summary

The basic parameter of a vacuum arc cathode spots, namely the ion erosion rate, for different sixteen elements have been determined by measurement of maximum ion current from the vacuum arc discharge plasma. This method has allowed avoid of cathode mass-flow influence due to neutral macroparticles emission, because only current measurements was made without cathode weighting. From the present experimental results it is established, that defined in similar way the ion erosion rate for the investigated elements is the characteristic of a cathode material and does not depend on vacuum arc current amplitude and an external magnetic field.

Acknowledgements

The author is gratefully acknowledged for fruitful discussion of experimental results by E.M. Oks, G.Yu. Yushkov, A.G. Nikolaev, A. Anders and I.G. Brown. This work was supported by the U.S. Department of Energy, Initiatives of Proliferation Prevention, project IPP-LBNL-T2-196, under Contract No. DEAC02- 05CH11231, and by the

Russian Foundation for Basic Research, grant RFBR # 05-02-16256a.

References

[1] I. G. Brown and E. M. Oks, IEEE Trans. Plasma Sci. **25**, 1222 (1997).
[2] E. M. Oks, A. Anders, I. G. Brown, M. R. Dickinson and R. A. MacGill, IEEE Trans. Plasma Sci. **24**, 1174 (1996).
[3] A. Anders, IEEE Trans. Plasma Sci. **31**, 1052 (2003).
[4] I. G. Kesaev, *Cathode Processes of an Electric Arc* (Nauka, Moscow, 1968) (in Russian).
[5] J. M. Lafferty, *Vacuum Arcs – Theory and Applications* (Wiley, New York, 1980).
[6] R. L. Boxman, D. M. Sanders and P. J. Martin, *Handbook of Vacuum Arc Science and Technology* (Noyes, Park Ridge, N.J., 1995).
[7] G. A. Mesyats, *Cathode Phenomena in a Vacuum Discharge: The Breakdown, the Spark, and the Arc* (Nauka, Moscow, 2000).
[8] A. Anders, *Cathodic Arc Plasma Deposition: From Fractal Spots to Energetic Condensation* (Springer, New York, 2005) (in preparation).
[9] A. A. Plyutto, V. N. Ryzhkov, and A. T. Kapin, Sov. Phys. JETP **20**, 328 (1965).
[10] C. W. Kimblin, J. Appl. Phys. **44**, 3074 (1973).
[11] C. W. Kimblin, J. Appl. Phys. **45**, 5235 (1974).
[12] Y. Y. Udris, Radio Eng. Electron. Phys. **8**, 1050 (1963).
[13] J. E. Daalder, J. Phys. D: Appl. Phys. **9**, 2379 (1976).
[14] J. E. Daalder, J. Phys. D: Appl. Phys. **8**, 1647 (1975).
[15] G. A. Mesyats and S. A. Barengol'ts, Phys. Uspekhi **45**, 1001 (2002).
[16] I. G. Brown and H. Shiraishi, IEEE Trans. Plasma Sci. **18**, 170 (1990).
[17] Brown I.G., Rev. Sci. Instrum. – 1994. – V. 65, No 10. – P. 3061-3081.
[18] C. Kittel. *Introduction in Solid State Physics.* New York: John Willey & Sons, 1986.
[19] A. Anders, in *Emerging Applications of Vacuum-Arc-Produced Plasma, Ion and Electron Beams,* NATO Science Series II. Mathematics, Physics and Chemistry, vol. 88, I. Brown and E. Oks, Eds. (Kluwer, Dordrecht, 2002), pp. 1-14.